Crouse-Hinds by EATON

Exd(e), Weatherproof

Features

- Zone 1, Zone 2 and non-Ex use.
- Ex de IIC T4/T5.
- ATEX approved, EEx II 2GD.
- Optional Exe terminal chamber.
- BASEEFA certified.
- IECEx certified Gb, Db.
- CUTR certified.
- Chinese (CQST) certified.
- Brazilian (Inmetro) certified.
- IP66 and IP67.
- *Certified temperature: –55°C to +70°C.
- All GRP corrosion free flamepaths.
- Up to 110dB(A) output.
- Integral volume control.
- d.c. version accepts any voltage between 12V d.c. and 48V d.c.
- End of line resistor option.
- Sounder/Beacon Combination Unit available.
- Bell recording version available.

**Depending on version.*

Introduction

This range of lightweight all GRP, flameproof voice sounders is intended for use in potentially explosive gas and dust atmospheres and has been designed with high ingress protection to cope with the harsh environmental conditions found offshore and onshore in the oil, gas and petrochemical industries.

The flamepaths, flare and the body, are manufactured completely from a UV stable glass reinforced polyester. Stainless steel screws and sinter are incorporated thus ensuring a corrosion free product. A tapered flamepath is used to overcome the problems of assembly of parallel spigot flamepaths.

This unit offers up to 20 seconds of speech which can be recorded via an integral microphone or an input from an external source. The unit incorporates a variable delay allowing speech to be repeated at equal intervals of up to approximately 15 seconds.

In addition, a 'mechanical bell' sound version is available.

An optional Exe terminal chamber is available.

An uncertified version is available for use in non-explosive atmospheres.

ATEX IECEx UL LISTED CUTR INMETRO CQST

Certification and Specification

ATEX EEx d:	Cert. no. BAS00ATEX2097X. Certified to: EN50014, EN50018. Ex II 2GD, EEx d IIC T4/T5.
ATEX EEx de:	Cert. no. BAS00ATEX2098X. Certified to: EN50014, EN50018, EN50019. Ex II 2GD, EEx de IIC T4/T5.
IECEx Ex d:	Cert. no. IECEx BAS 11.0083X. Certified to: IEC60079-0, IEC60079-1, IEC60079-31. Ex d IIC T4/T5 Gb, Ex tb IIIC T100ºC/T135ºC Db.
IECEx Ex de:	Cert. no. IECEx BAS 11.0084X. Certified to: IEC60079-0, IEC60079-1, IEC60079-7, IEC60079-31. Ex de IIC T4/T5 Gb, Ex tb IIIC T100ºC/T135ºC Db.
CUTR Ex d:	1Ex d IIC T4/T5 Gb, Ex tb IIIC T100ºC/T135ºC Db. Russian Fire Approved.
CUTR Ex de:	1Ex de IIC T4/T5 Gb, Ex tb IIIC T100ºC/T135ºC Db. Russian Fire Approved.
Inmetro Ex d:	Ex d IIC T4/T5 Gb.
Inmetro Ex de:	Ex d e IIC T4/T5 Gb.
CQST:	Exd IIC T4.
Material:	Body & horn in anti-static, UV stable, glass reinforced polyester (GRP). Swivel bracket & captive cover screws in stainless steel.
Finish:	Body and horn, natural black or painted to customer colour requirements.
Voltage:	Up to 48V d.c.
Weight:	6.0kg approx. dependent on model (+0.5kg for Exe).
Ingress Protection:	IP66 & 67.
Entries:	Up to 2 x M20 Exd. 2 x M20 Exe.
Terminals:	6 x 2.5mm^2 (d.c.).
Output:	110dB(A) (message dependent).
Volume Control:	Potentiometer.
Voice Recording:	Up to 20 seconds recording time.
Fire Retardancy:	GRP is fire retardant to ISO 1210.
Mounting:	Stainless steel bracket with ratchet facility.
Earth Continuity:	Included on Exde version.
Sounder/Beacon Unit:	The DB3V may be combined with an MEDC beacon to create a combined voice/visual alarm. Contact MEDC for price and specification.
Labels:	Duty and tag labels optional.

Certified Temperature:

	Exd	Exde	GOST R&K Exd	GOST R Exde	Chinese Exd
DB3V	–20ºC +70ºC	–20ºC +70ºC	–20ºC +50ºC	–20ºC +40ºC	–20ºC +55ºC
DB3LV*	–55ºC +70ºC	–50ºC +70ºC	–55ºC +55ºC	–55ºC +55ºC	n/a

* DB3LV IECEx Min Temp - 40ºC.

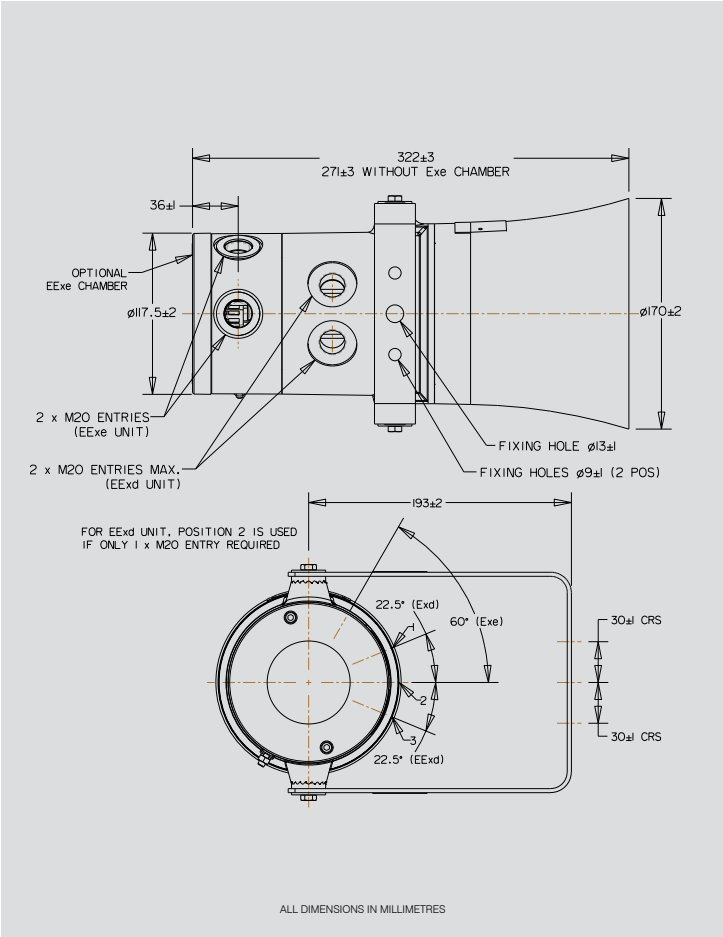

Current Consumption:

V	I
12V d.c.	1.2A
24V d.c.	600mA
48V d.c.	300mA

Ordering Requirements

The following code is designed to help in selection of the correct unit. Build up the reference number by inserting the code for each component into the appropriate box.

Model

Model	Details
DB3V	Voice unit
DB3LV †	Low temp voice unit*

* Available unpainted only.
† Min IECEx temp -40ºC.

Certification

Certification	Code
Uncertified	W
ATEX Exd	D
ATEX Exde	E
IECEx Exd	DJ
IECEx Exe	EJ
CUTR Exd	DG
CUTR Exde	EG
Chinese (CQST)	Q
Inmetro Exd	DM
Inmetro Exde	EM

Options

Options	Code
Duty	D*
Tag	T*
End of line resistor	E†
Bell tone	O
None	N

* Please specify wording.
† State value.

Entries

Entries	Code
1 x M20 (Exd)	1B
2 x M20 (Exd/Exe)	2B
2 x M20 (Exd/Exe)	2BP*

* With one certified plug fitted.

Finish

Finish	Code
Natural Black	N
Red	R
Special	S*

* Please specify.

All specifications, dimensions, weights and tolerances are nominal (typical) and MEDC reserve the right to vary all data without prior notice.
No liability is accepted for any consequence of use.